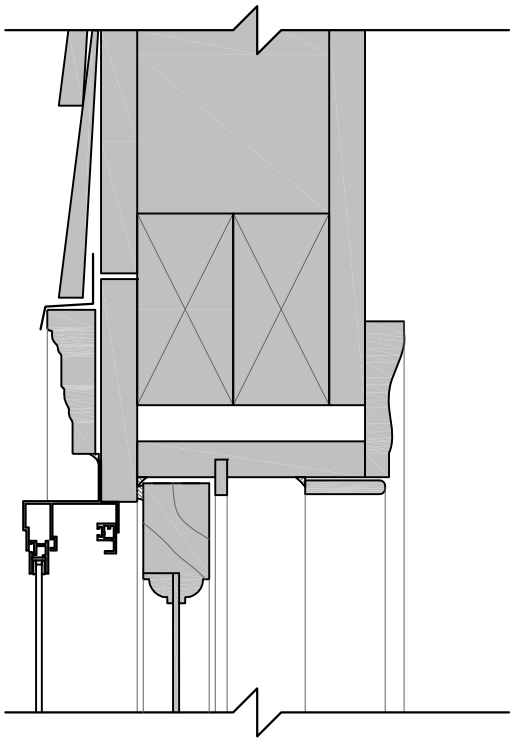

GRAY TONE INDICATES
EXISTING STRUCTURE

WINDOW HEAD AT WOOD FRAME WALL - B

SCALE: 3" = 1'-0"

bsc with Building America U.S. Department of Energy Research Toward Zero Energy Homes

Wood Frame Wall
Window Retrofit Options

Date: 2011-11-03

Sheet Title:

W-WHb

COPYRIGHT © 2011 BUILDING SCIENCE CORPORATION